REVISIONS				
REV	DATE	DRWN	CHK'D	DESCRIPTION
A	15JUL14	CR		INITIAL RELEASE

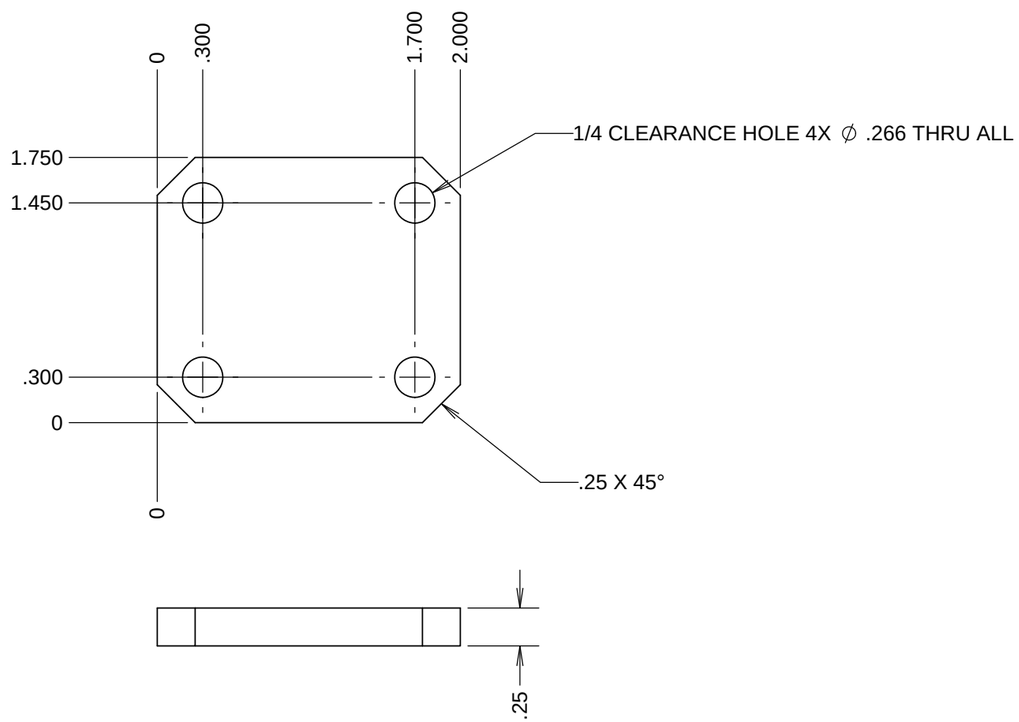

NOTES
1. None

UNLESS OTHERWISE NOTED DIMENSIONS ARE IN INCHES & TOLERANCES ARE AS FOLLOWS

X.X: ±0.1000" X.XX: ±0.0100"
X.XXX: ±0.0050" X.XXXX: ±0.0001"
ANGLES: ±0.5° FINISH: 125 MICRO INCHES

BREAK ALL SHARP EDGES & CORNERS .002" MAX

MATERIAL	FINISH
Al 6061 T6	NA

LICK OBSERVATORY

DRAWN	RATLIFF	--
CHECKED	--	--
DESIGNED	--	--
ENGINEER	--	--
SW DOCUMENT FILE		QUANTITY 2

KECK 1 DEPLOYABLE TERTIARY MIRROR

TEST BED

TITLE: Tensile Member, Reinforcement

PROJECT CODE: --

NEXT ASS'Y: NEXT ASS'Y

DWG NO: KDM7024

REV: A

1/1