REVISIONS				
REV	DATE	DRWN	CHK'D	DESCRIPTION
A	20JUN14	CR		INITIAL RELEASE
B	18JUL14	CR		ADDED NOTE, CHANGED QUANTITY

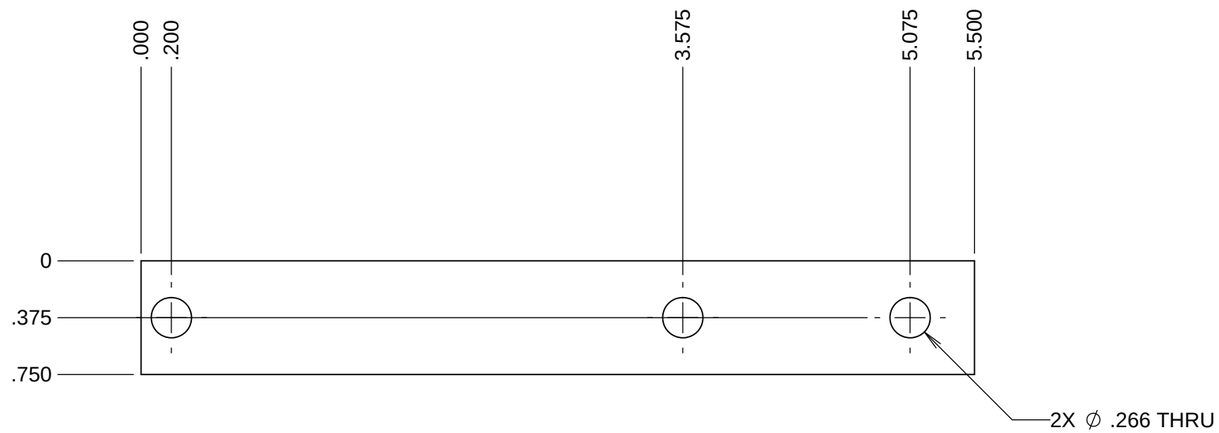

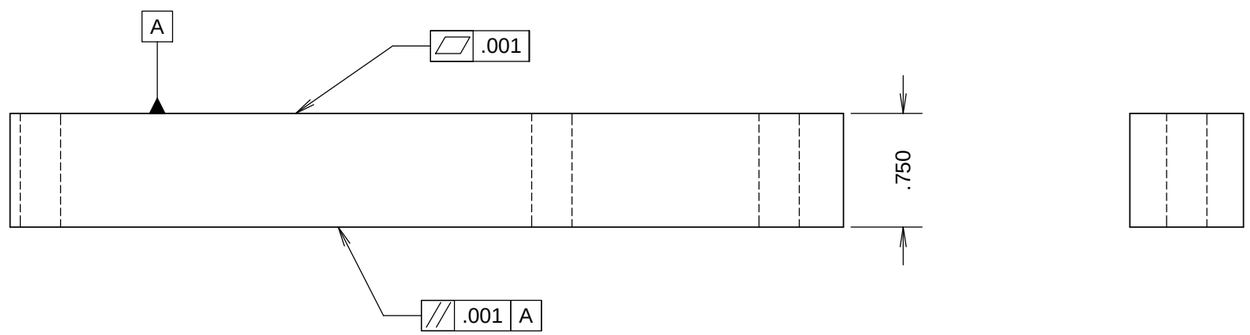

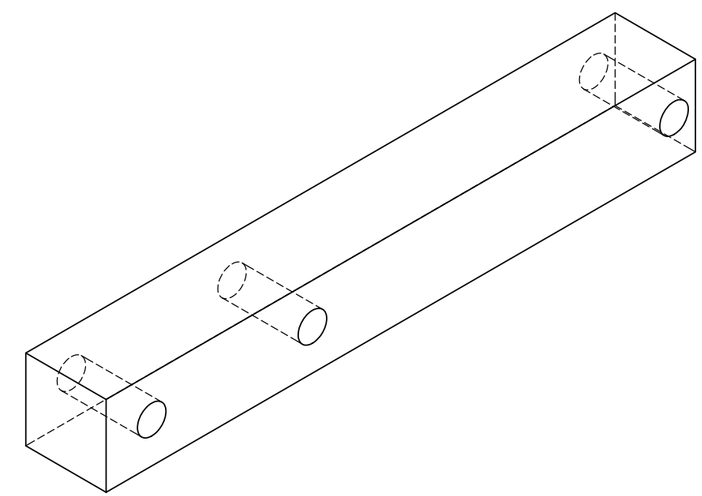

NOTES
1. WILL BE USED TO KEEP CANOE SPHERE AND V-BLOCK ALIGNED DURING INSTALLATION

UNLESS OTHERWISE NOTED DIMENSIONS ARE IN INCHES & TOLERANCES ARE AS FOLLOWS
X.X: ±0.1000" X.XX: ±0.0100"
X.XXX: ±0.0050" X.XXXX: ±0.0001"
ANGLES: ±0.5° FINISH: 125 MICRO INCHES
BREAK ALL SHARP EDGES & CORNERS .002" MAX

MATERIAL: PER JIM WARD
FINISH: NA

LICK OBSERVATORY

DRAWN: RATLIFF
CHECKED: --
DESIGNED: --
ENGINEER: --
SW DOCUMENT FILE
QUANTITY: 6

KECK 1 DEPLOYABLE TERTIARY MIRROR
TEST BED
TITLE: KINEMATIC COUPLING ALIGNMENT BAR
PROJECT CODE: --
NEXT ASS'Y: NEXT ASS'Y
DWG NO: KDM7013
REV: B
1/1