| REVISIONS | | | | |
|---|---|---|---|---|
| REV | DATE | DRW'N | DESCRIPTION | CHCK'D |
| A | 4/19/2018 | CR | INITIAL RELEASE | |

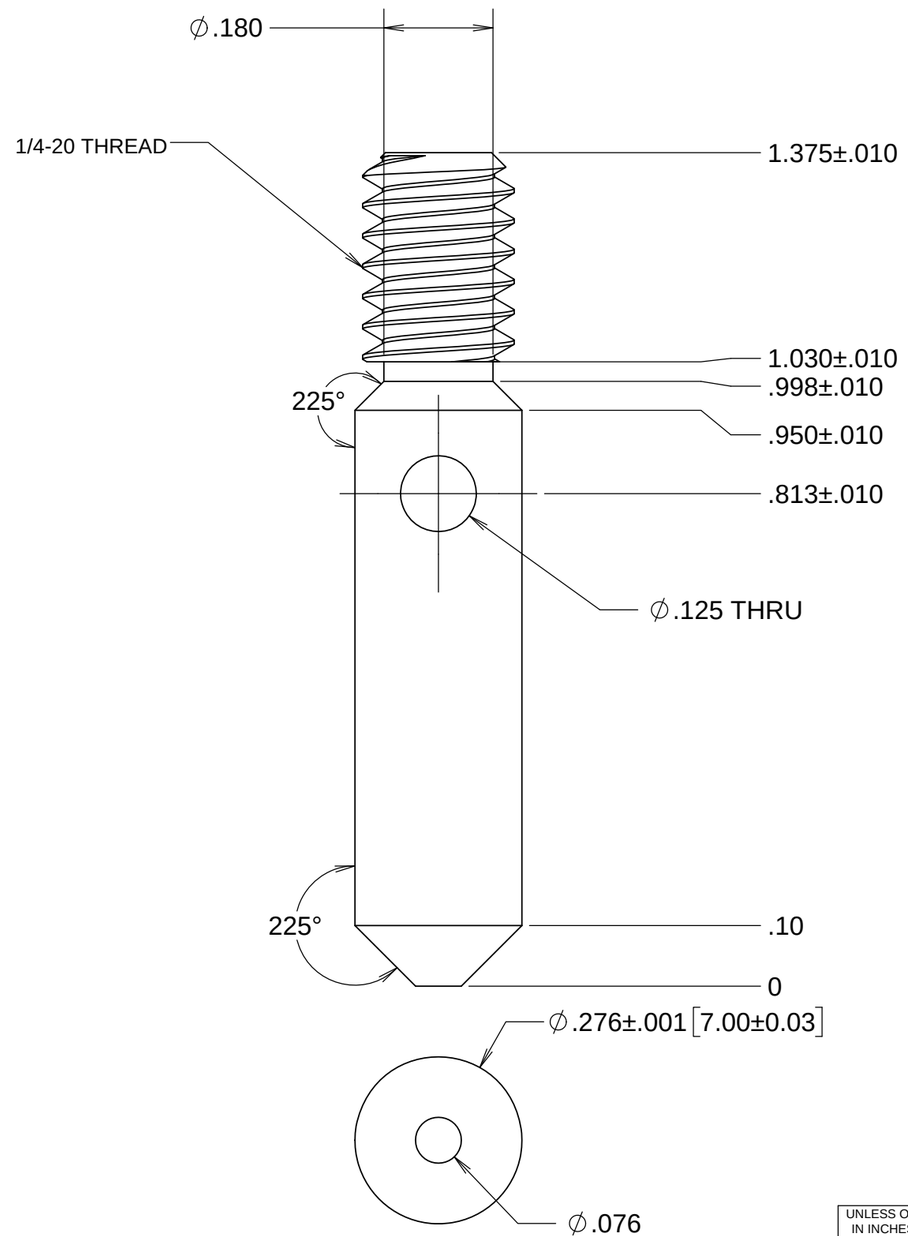


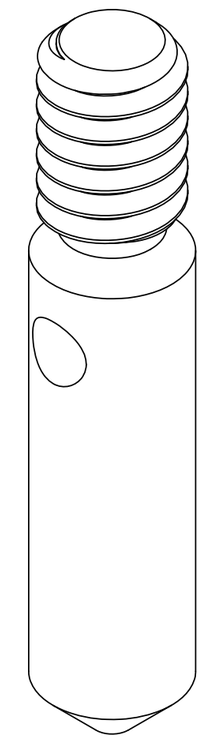

UNLESS OTHERWISE NOTED DIMENSIONS ARE IN INCHES & TOLERANCES ARE AS FOLLOWS

X.X: ±0.1000" X.XX: ±0.0100"
X.XXX: ±0.0050" X.XXXX: ±0.0001"
ANGLES: ±0.5° FINISH: 125 MICRO INCHES
BREAK ALL SHARP EDGES
& CORNERS .002" MAX

| MATERIAL | FINISH |
|---|---|
| ALUMINUM | NA |

LICK OBSERVATORY

| | | |
|---|---|---|
| DRAWN | CR | -- |
| CHECKED | -- | -- |
| DESIGNED | CR | -- |
| ENGINEER | NA | -- |
| SW DOCUMENT FILE | 1 | |

KECK 1 DEPLOYABLE TERTIARY MIRROR TOOLING

TITLE: THREADED PIN

| PROJECT CODE | DWG NO | |
|---|---|---|
| K1D3FD | 872-LM8696 | A |
| NEXT ASSY: -- | | 1/1 |