REVISIONS				
REV	DATE	DRW'N	DESCRIPTION	CHCK'D
A	3/20/2018	CR	INITIAL RELEASE	

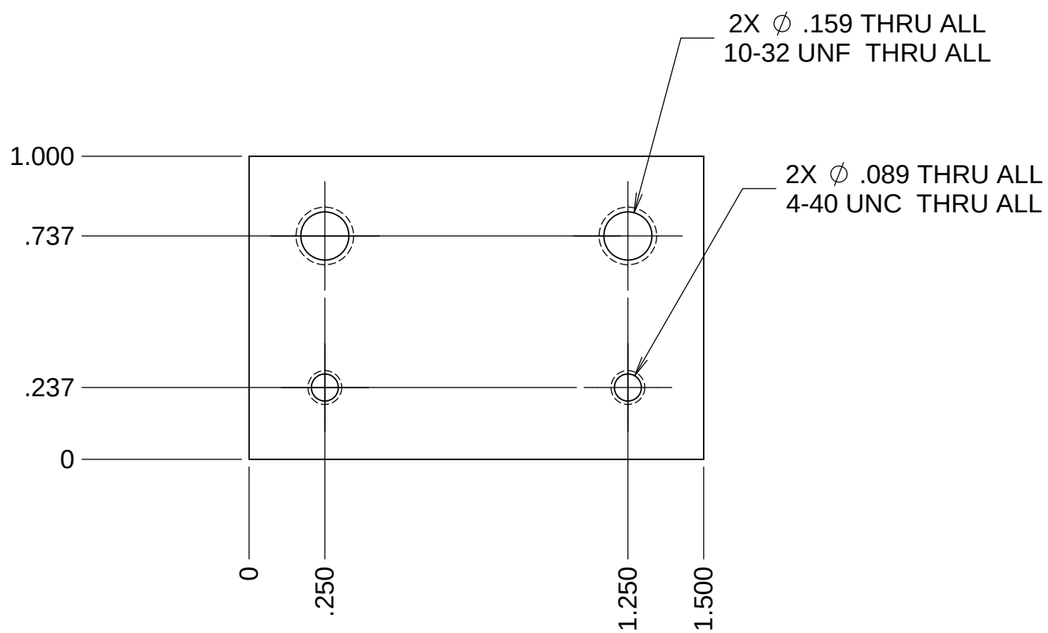

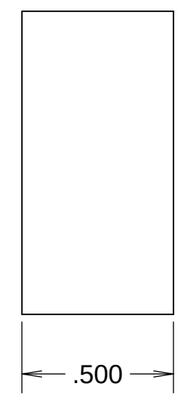

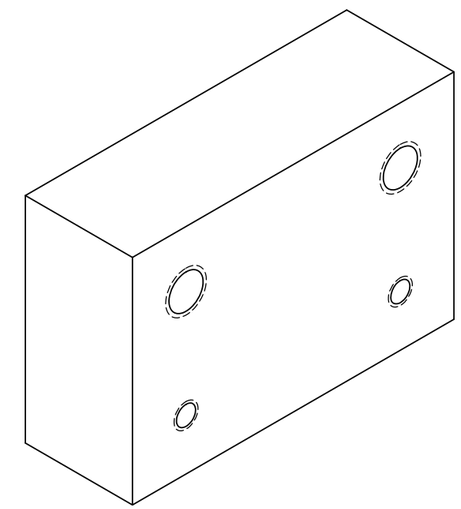

NOTES

1. CAD MODEL FILENAME, *872-LM8692 Light Base Fastener*
2. *REMOVE BURRS AND SHARP EDGES*
3. *QUANTITY: 4*

UNLESS OTHERWISE NOTED DIMENSIONS ARE IN INCHES & TOLERANCES ARE AS FOLLOWS

X.X: ±0.1000" X.XX: ±0.0100"
X.XXX: ±0.0050" X.XXXX: ±0.0001"
ANGLES: ±0.5° FINISH: 125 MICRO INCHES
BREAK ALL SHARP EDGES
& CORNERS .002" MAX

MATERIAL	FINISH
6061 T6 ALUMINUM OR SIMILAR	NA

LICK OBSERVATORY

DRAWN	CR	--
CHECKED	--	--
DESIGNED	CR	--
ENGINEER	NA	--

SW DOCUMENT FILE 1

KECK 1 DEPLOYABLE TERTIARY MIRROR TOOLING

TITLE: LIGHT BASE FASTENER

PROJECT CODE: K1D3FD
NEXT ASSY: --
DWG NO: 872-LM8692
A
1/1