REVISIONS				
DRWN	DATE	CHK'D	REV	DESCRIPTION
CR	18SEP2017		A	PRELIMINARY RELEASE

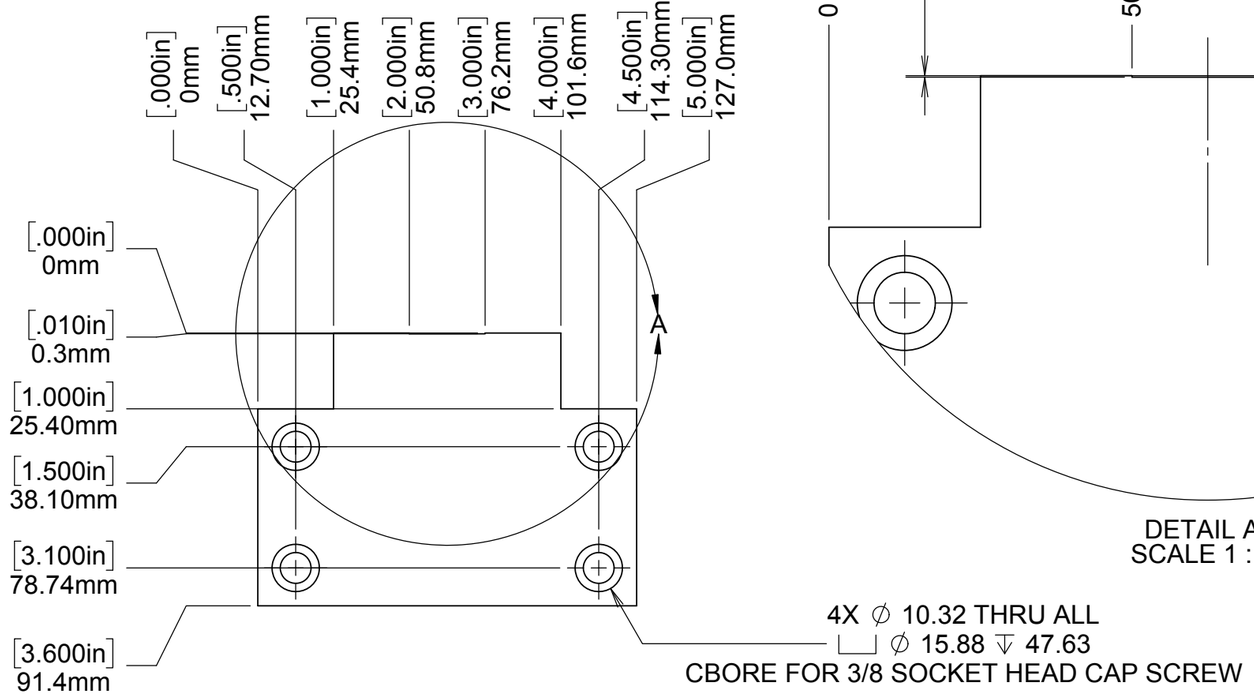

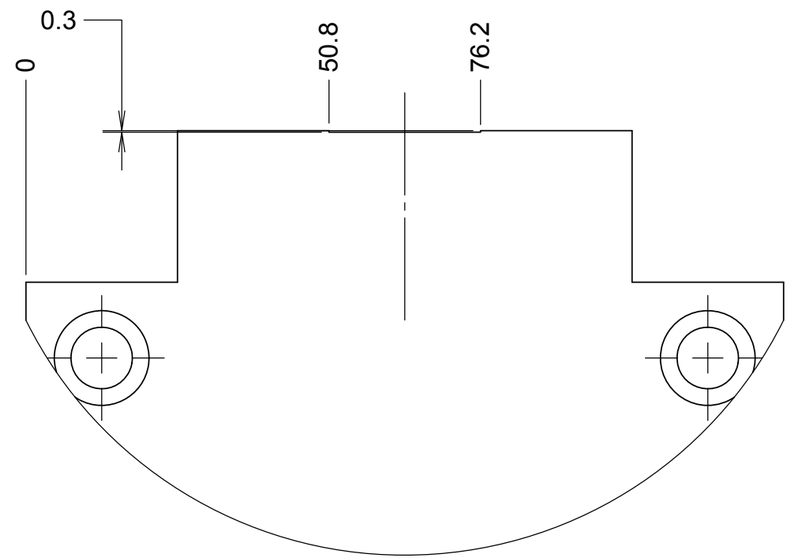

DETAIL A
SCALE 1 : 1

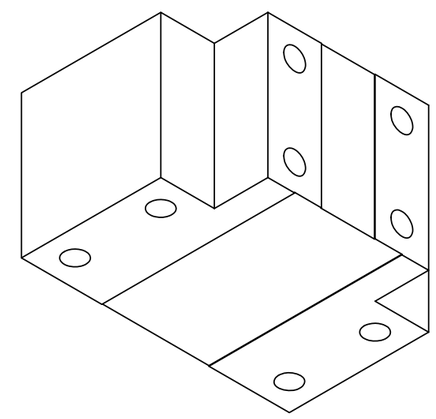

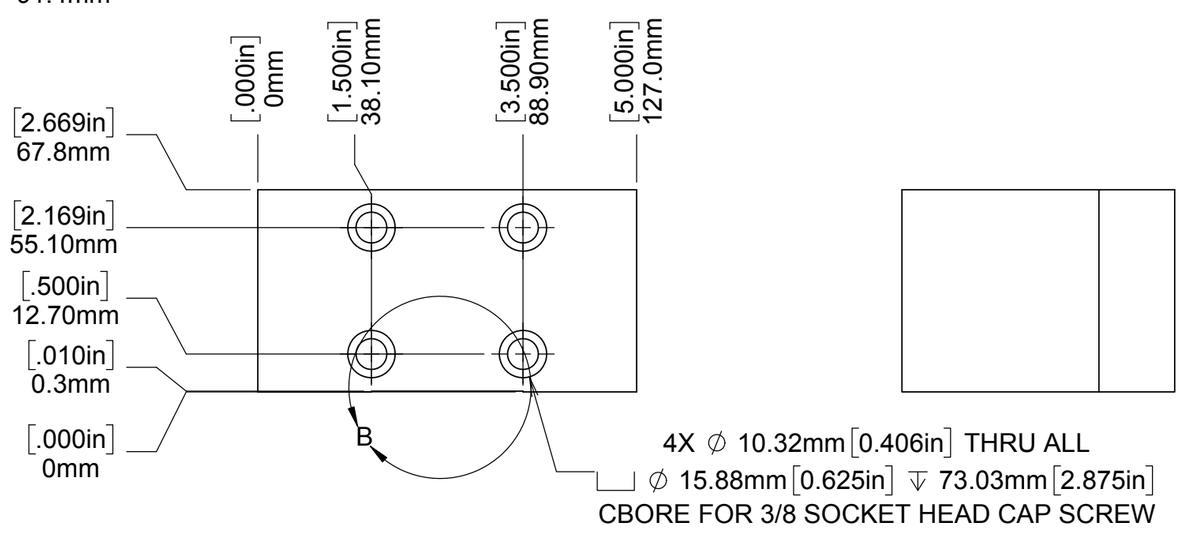

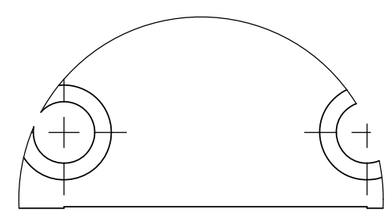

DETAIL B
SCALE 1 : 1

NOTES:
1. COUNTER BORES AND THRU HOLES SHOULD BE LOOSE FIT FOR 3/8 INCH SHCS

UNLESS OTHERWISE NOTED DIMENSIONS ARE IN MILLIMETERS & TOLERANCES ARE AS FOLLOWS:
X.X: ±0.20 mm X.XX: ±0.1 mm
ANGLES: ±0.5° FINISH: 3 MICRONS (μm)
BREAK ALL SHARP EDGES & CORNERS .25mm MAX

MATERIAL: STEEL
FINISH:

LICK OBSERVATORY

DRAWN: C. RATLIFF
CHECKED: DM
DESIGNED: C. RATLIFF
ENGINEER:
SW DOCUMENT FILE: 872-LM8661 Hex Fixture K1DM3 Mount
QUANTITY: 3

KECK 1 DEPLOYABLE TERTIARY MIRROR
K1DM3 TOOLING
TITLE: HEX FIXTURE K1DM3 MOUNT
PROJECT CODE: K1D3FD
NEXT ASSY: 872-LM0000
DWG NO: 872-LM8661
REV: A
1 / 1