REVISIONS				
DRWN	DATE	CHK'D	REV	DESCRIPTION
CR	27JUN17		A	PRELIMINARY RELEASE

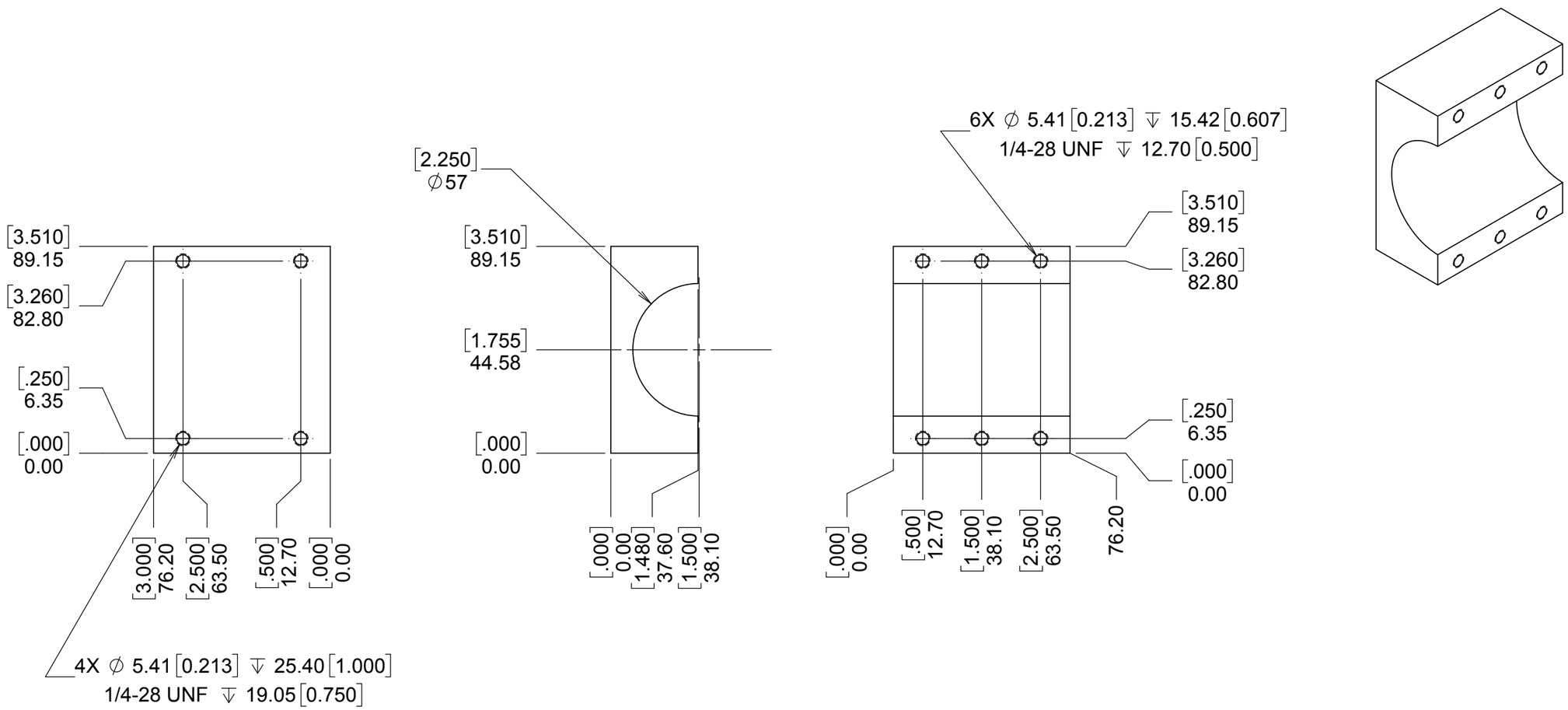

NOTES

1. CAD MODEL FILENAME, *872-LM8653 M2 Alignment Telescope Mount B*
2. MATERIAL: STEEL
3. ALL 1/4-28 HOLES CAN BE THRU IF EASIER TO FABRICATE

UNLESS OTHERWISE NOTED DIMENSIONS ARE IN MILLIMETERS & TOLERANCES ARE AS FOLLOWS:
X.X: ±0.10 mm X.XX: ±0.01 mm
ANGLES: ±0.5° FINISH: 3 MICRONS (μm)
BREAK ALL SHARP EDGES & CORNERS .25mm MAX

MATERIAL: SEE NOTES
FINISH:

LICK OBSERVATORY

DRAWN: C. RATLIFF
CHECKED: JW DM — TBD
DESIGNED: C. RATLIFF — NA
ENGINEER:

SW DOCUMENT FILE: 872-LM8653 M2 Alignment Telescope Mount B
QUANTITY: 1

KECK 1 DEPLOYABLE TERTIARY MIRROR
K1DM3 TOOLING
TITLE: M2 ALIGNMENT TELESCOPE MOUNT B

PROJECT CODE: K1D3DD
NEXT ASSY: 872-LM0000
DWG NO: 872-LM8653
REV: A
1/1