REVISIONS				
DRWN	DATE	CHK'D	REV	DESCRIPTION
CR	1DEC17		A	INITIAL RELEASE

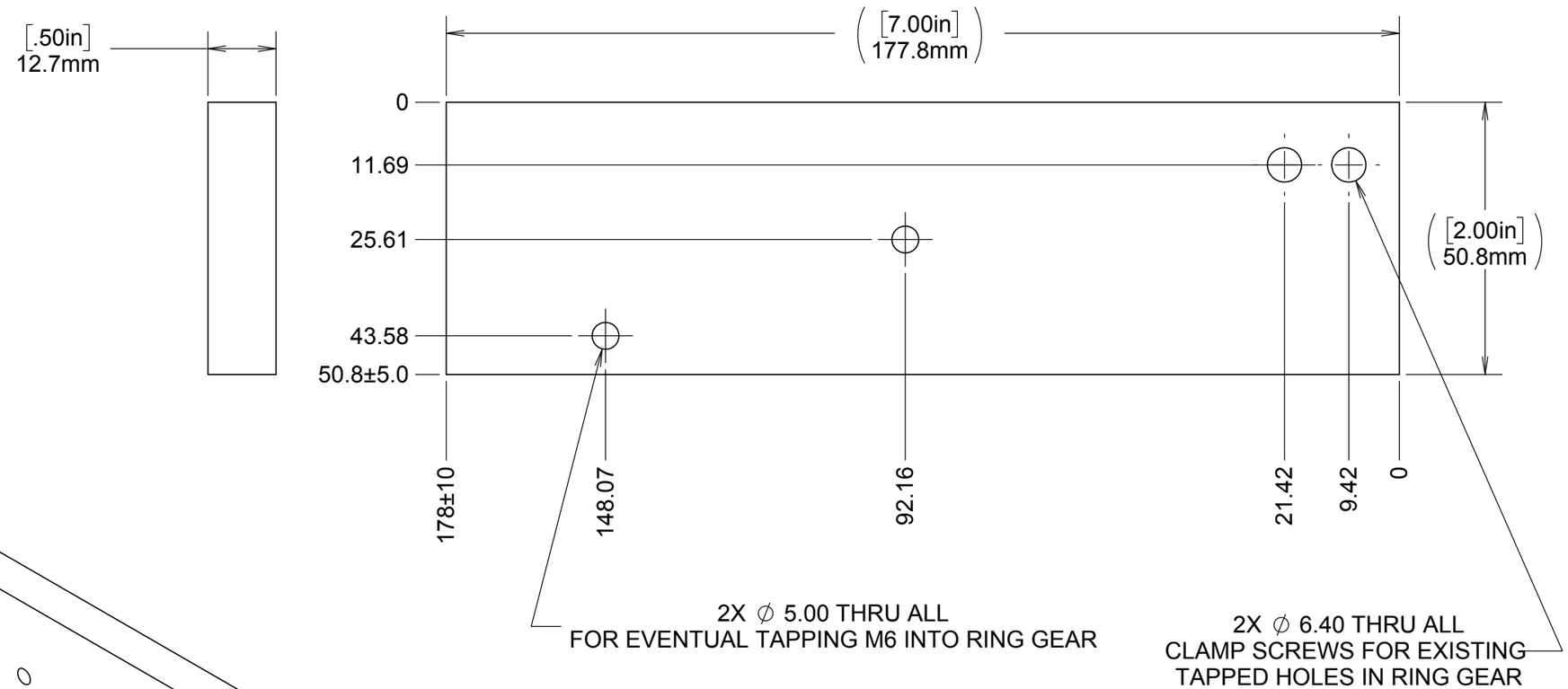

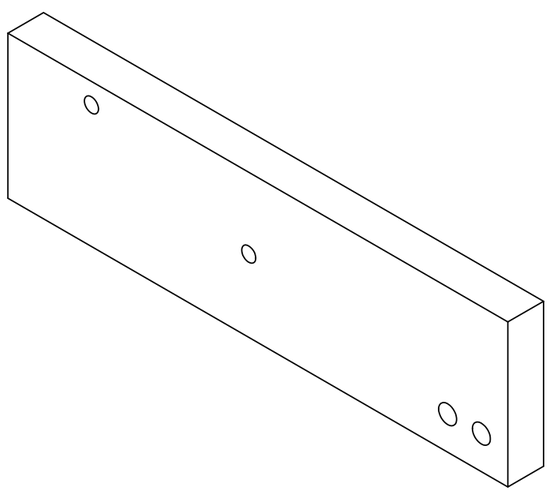

NOTES

1. CAD MODEL FILENAME, *872-LM8573 Drill Template H*
2. MATERIAL: STEEL APPROPRIATE FOR DRILL JIG
3. BREAK ALL SHARP EDGES

UNLESS OTHERWISE NOTED DIMENSIONS ARE IN MILLIMETERS & TOLERANCES ARE AS FOLLOWS:
X.X: ±0.10 mm X.XX: ±0.05 mm
ANGLES: ±0.5° FINISH: 3 MICRONS (μm)
BREAK ALL SHARP EDGES & CORNERS .25mm MAX

MATERIAL: SEE NOTES
FINISH:

LICK OBSERVATORY

DRAWN: C. RATLIFF
CHECKED: DM — TBD
DESIGNED: C. RATLIFF — NA
ENGINEER:
SW DOCUMENT FILE: 872-LM8573 Drill Template H
QUANTITY: 1

KECK 1 DEPLOYABLE TERTIARY MIRROR
TOOLING
TITLE: DRILL TEMPLATE H
PROJECT CODE: K1D3FD
NEXT ASSY: 872-LM0000
DWG NO: 872-LM8573
REV: A
1/1