REVISIONS				
DRWN	DATE	CHK'D	REV	DESCRIPTION
CR	26JUN17		A	PRELIMINARY RELEASE

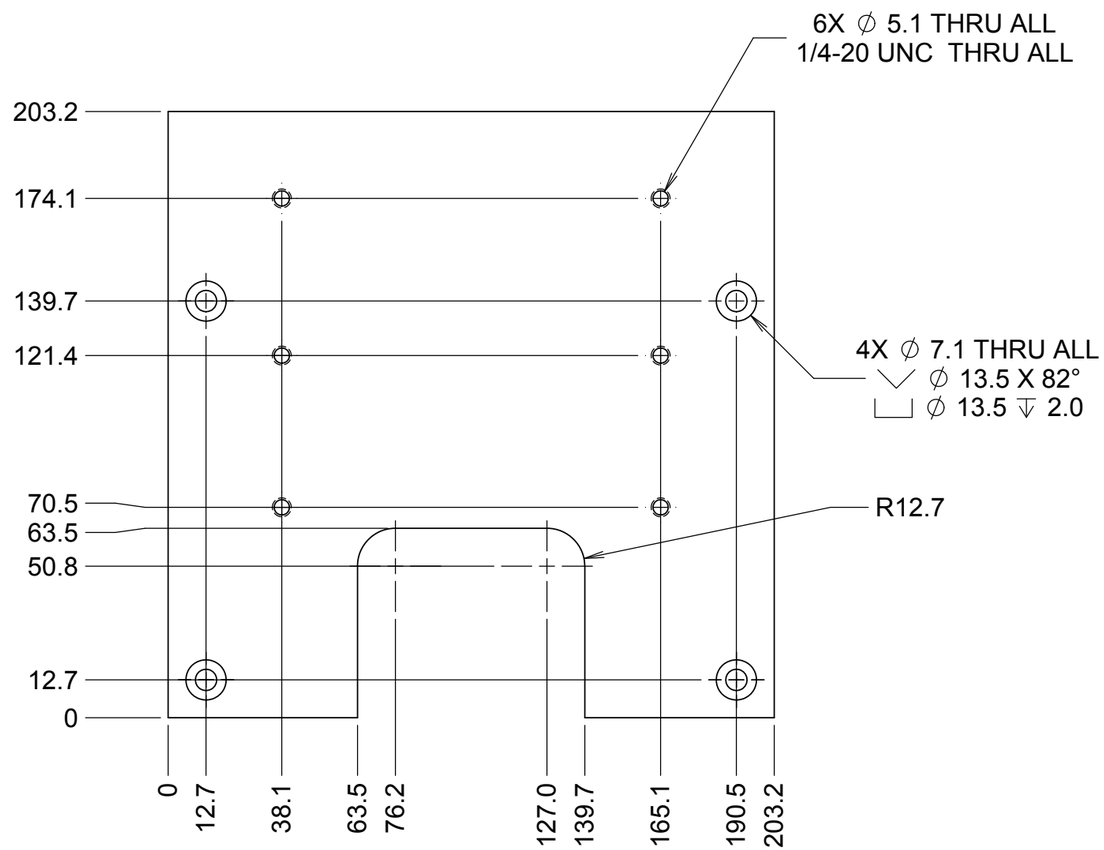

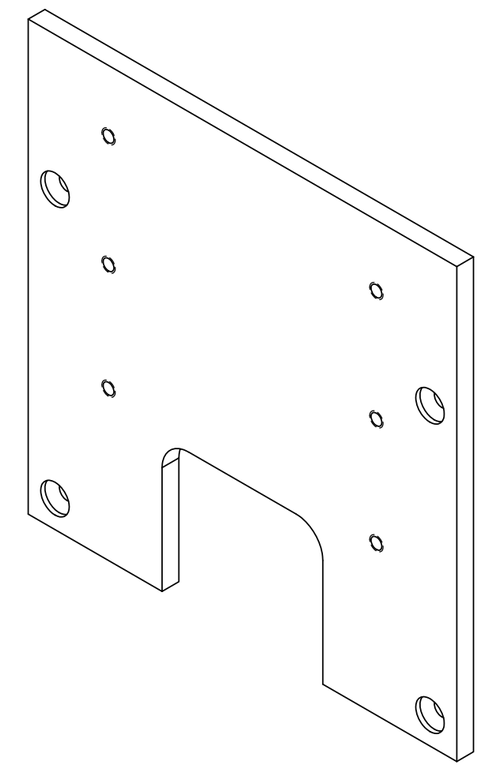

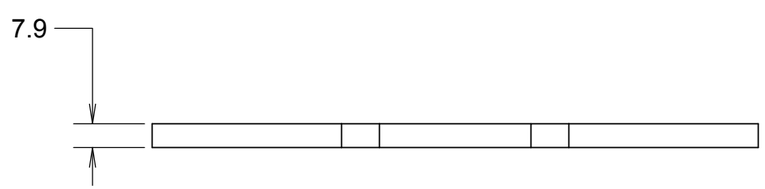

NOTES

1 CAD MODEL FILENAME, *872-LM8563 AT Plate D*
2 MATERIAL: STEEL

UNLESS OTHERWISE NOTED DIMENSIONS ARE IN MILLIMETERS & TOLERANCES ARE AS FOLLOWS:
X.X: ±0.10 mm X.XX: ±0.01 mm
ANGLES: ±0.5° FINISH: 3 MICRONS (μm)
BREAK ALL SHARP EDGES & CORNERS .25mm MAX

MATERIAL: SEE NOTES
FINISH:

LICK OBSERVATORY

DRAWN: C. RATLIFF
CHECKED: JW DM — TBD
DESIGNED: C. RATLIFF — NA
ENGINEER:
SW DOCUMENT FILE: 872-LM8563 AT PLATE D
QUANTITY: 1

KECK 1 DEPLOYABLE TERTIARY MIRROR
K1DM3 TOOLING
TITLE: AT PLATE D
PROJECT CODE: K1D3DD
NEXT ASSY: 872-LM0000
DWG NO: 872-LM8563
REV: A
1 / 1