REVISIONS				
DRWN	DATE	CHK'D	REV	DESCRIPTION
CR	10MAY17		A	PRELIMINARY RELEASE
CR	6/1/17		B	ADDED VIEW AND DIMENSIONS
CR	7/24/17		C	CHANGED TO STEEL
CR	9/28/2017		D	ADDED HOLES, BACK TO ALUMINUM

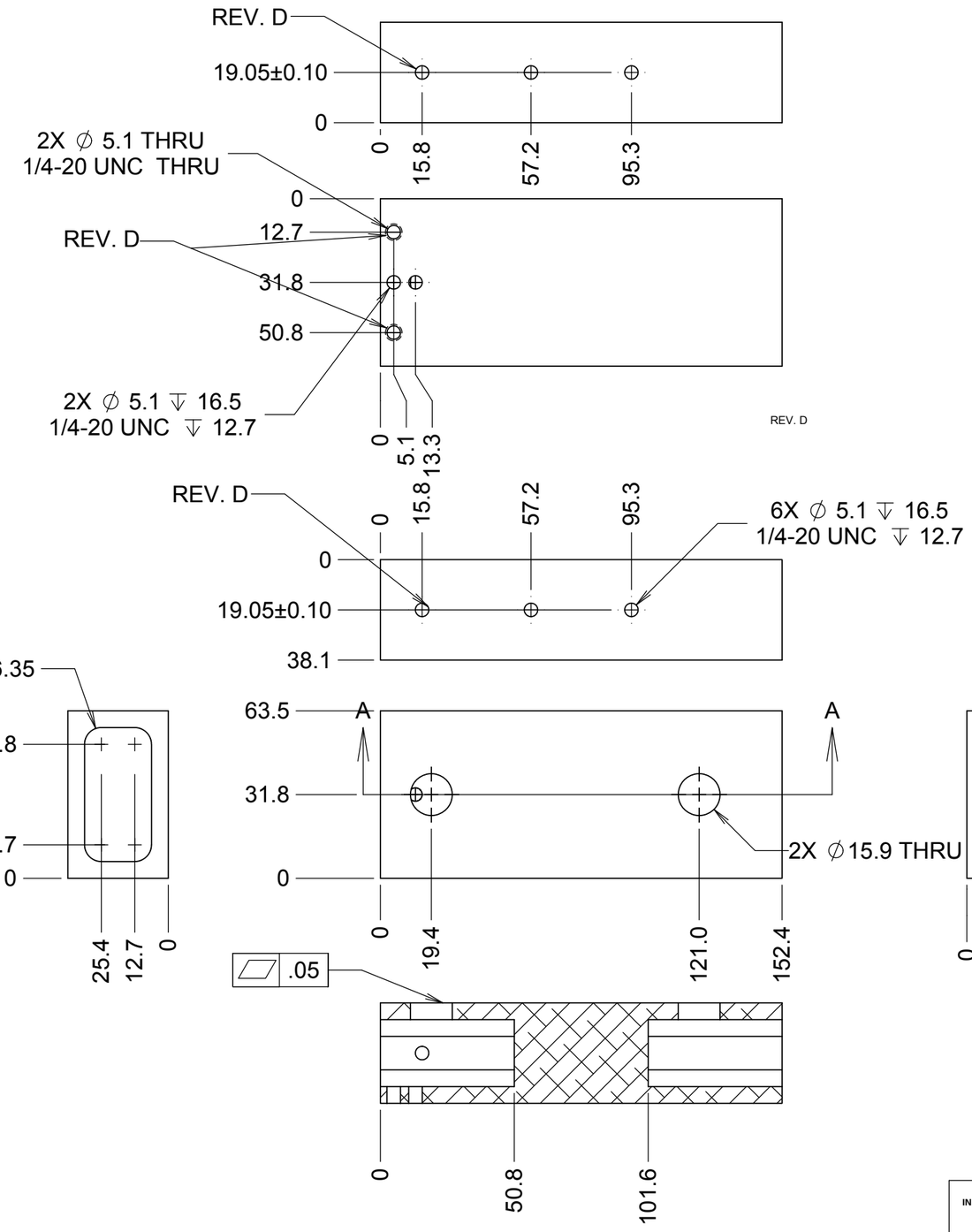

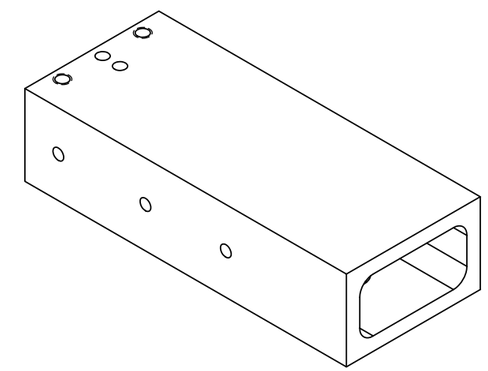

NOTES

1 CAD MODEL FILENAME, *872-LM8558 Aluminum Bridge*
2 MATERIAL: 6061 ALUMINUM

UNLESS OTHERWISE NOTED DIMENSIONS ARE IN MILLIMETERS & TOLERANCES ARE AS FOLLOWS:
X.X: ±0.10 mm X.XX: ±0.01 mm
ANGLES: ±0.5° FINISH: 3 MICRONS (μm)
BREAK ALL SHARP EDGES & CORNERS .25mm MAX

MATERIAL: SEE NOTES
FINISH:

LICK OBSERVATORY

DRAWN: C. RATLIFF
CHECKED: JW DM — TBD
DESIGNED: C. RATLIFF — NA
ENGINEER:
SW DOCUMENT FILE: 872-LM8558 STEEL BRIDGE
QUANTITY: 2

KECK 1 DEPLOYABLE TERTIARY MIRROR
K1DM3 TOOLING
TITLE: STEEL BRIDGE
PROJECT CODE: K1D3DD
NEXT ASSY: 872-LM0000
DWG NO: 872-LM8558
REV: D
1/1