REVISIONS				
REV	DATE	DRW'N	CHCK'D	DESCRIPTION
A	17MAR17	CR	--	INITIAL RELEASE

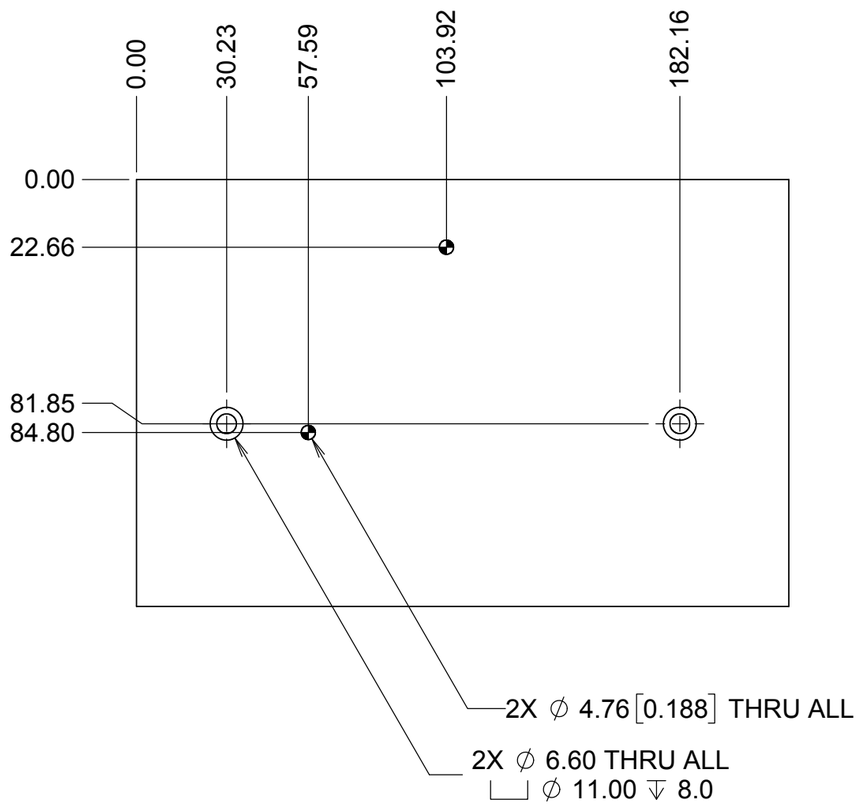

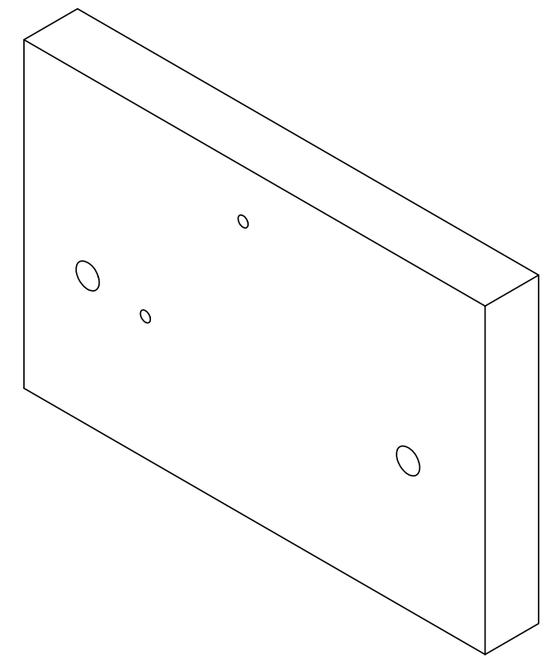

NOTES

1. CAD MODEL FILENAME, *872-LM8537 ring gear drill jig*
2. MATERIAL: STEEL
3. THICKNESS AND OUTER DIMENSIONS TO BE DETERMINED BY JIM WARD

UNLESS OTHERWISE NOTED DIMENSIONS ARE IN MILLIMETERS & TOLERANCES ARE AS FOLLOWS:
X.X: ±0.10 mm X.XX: ±0.04 mm
ANGLES: ±0.1° FINISH: 3 MICRONS (μm)
BREAK ALL SHARP EDGES & CORNERS .25mm MAX

MATERIAL	FINISH
NOTE 2	NA

LICK OBSERVATORY

DRAWN	RATLIFF	--
CHECKED	JW	--
DESIGNED	CR	--
ENGINEER	RATLIFF	--
SW DOCUMENT FILE	872-LM8537.SLDPRT	
QUANTITY	1	

KECK 1 DEPLOYABLE TERTIARY MIRROR

TOOLING

TITLE: RING GEAR DRILL JIG

PROJECT CODE: K1D3FD

NEXT ASSY: --

DWG NO: 872-LM8537

REV: A

1 / 1