REVISIONS				
REV	DATE	DRW'N	CHCK'D	DESCRIPTION
A	1FEB18	GFC	--	INITIAL RELEASE
B	06FEB18	GFC	--	DIMENSION CHANGE
C	09FEB18	GFC	DM	CHAMFER TO FILET

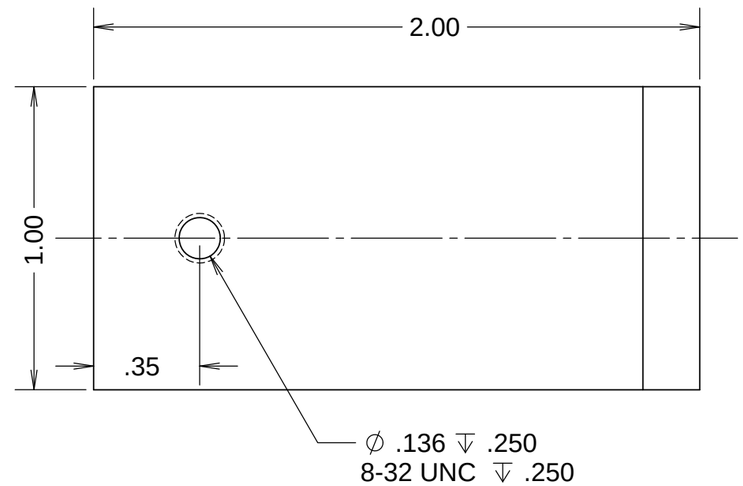

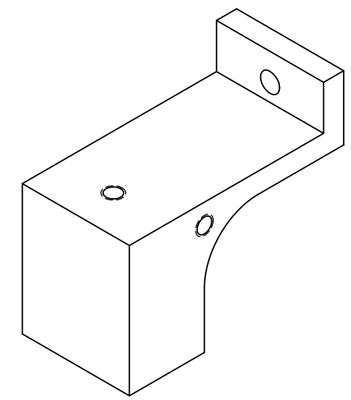

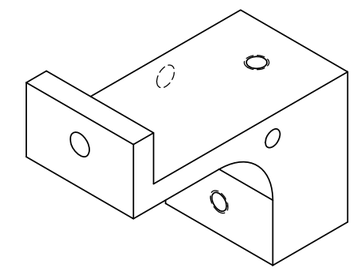

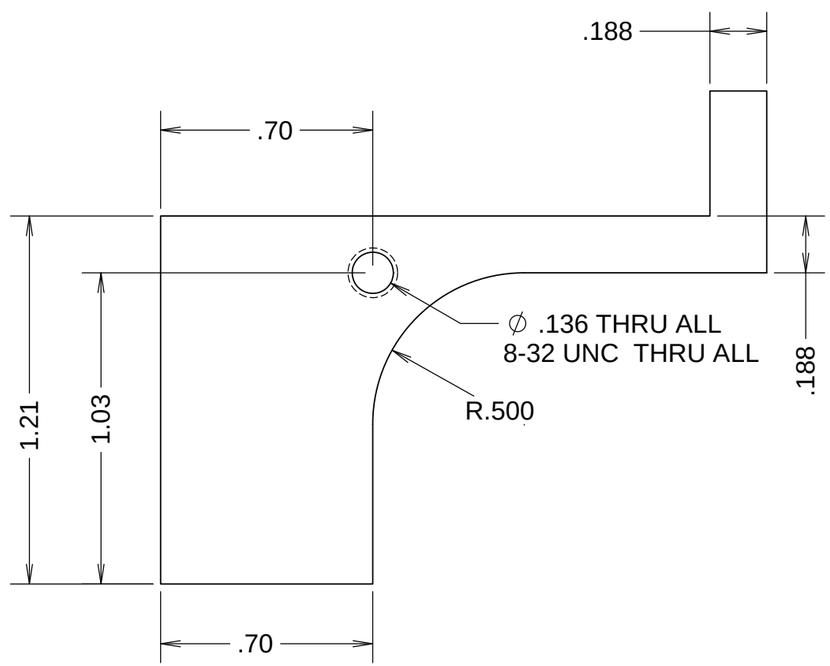

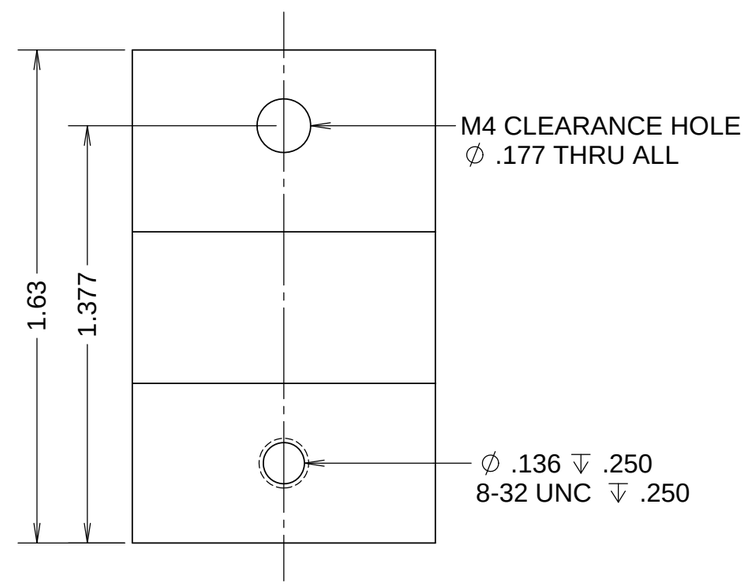

NOTES

1 CAD MODEL FILENAME, *872-LM8433 IndicatorRegister Type2*

UNLESS OTHERWISE NOTED DIMENSIONS ARE IN INCHES & TOLERANCES ARE AS FOLLOWS

X.X: ±0.1000" X.XX: ±0.0100"
X.XXX: ±0.0050" X.XXXX: ±0.0001"
ANGLES: ±0.5° FINISH: 125 MICRO INCHES
BREAK ALL SHARP EDGES
& CORNERS .002" MAX

MATERIAL: AL 5/6XXX
FINISH: --

LICK OBSERVATORY

DRAWN	CABAK	--
CHECKED	--	--
DESIGNED	CABAK	--
ENGINEER	CABAK	--

SW DOCUMENT FILE: 1

KECK 1 DEPLOYABLE TERTIARY MIRROR
TOOLING & FIXTURING

TITLE: INDICATOR REGISTER TYPE 2

PROJECT CODE: K1D3FD
NEXT ASSY: --
DWG NO: 872-LM8433
C
1/1