REVISIONS				
REV	DATE	DRW'N	CHCK'D	DESCRIPTION
A	26SEP17	GFC	--	INITIAL RELEASE
B	25OCT17	GFC	DM	MATERIAL CHANGE

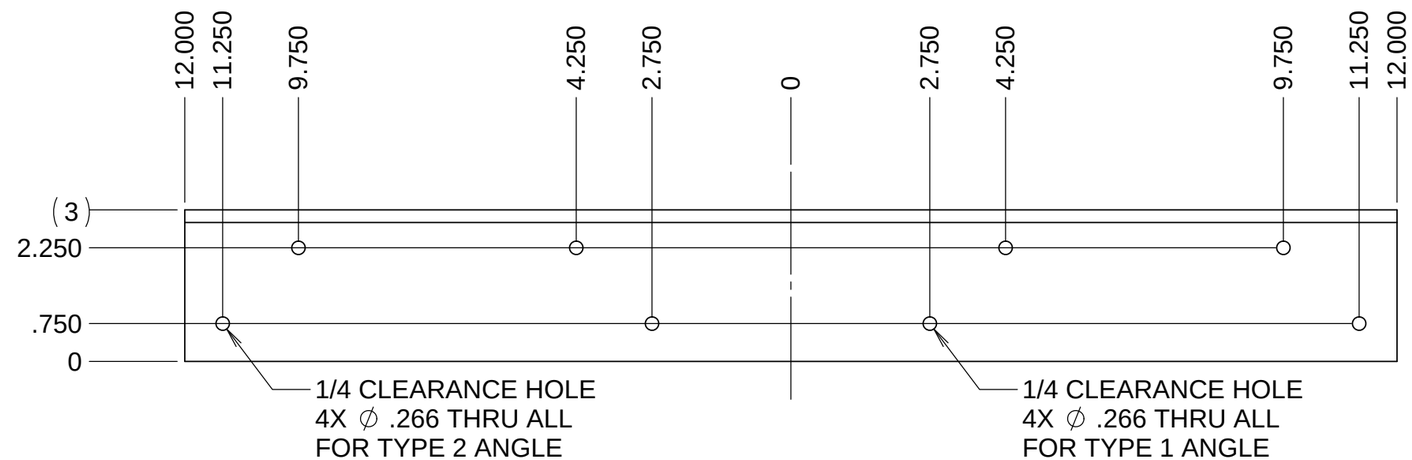

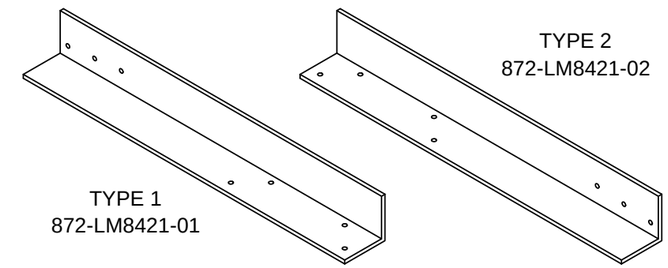

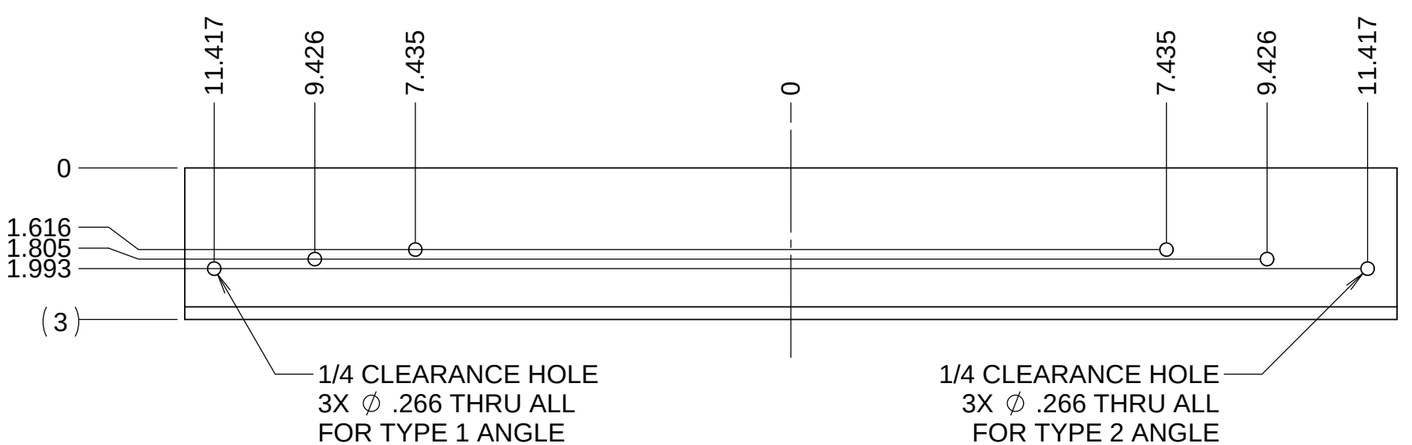

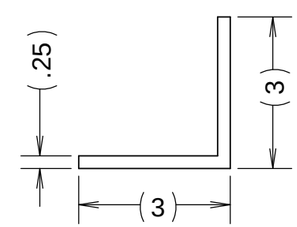

NOTES

1 CAD MODEL FILENAME, *872-LM8421 Main Angle*
2 MATERIAL, ALUMINUM (OR STEEL), 3 X 3 X 1/4, OR EQUIVALENT

UNLESS OTHERWISE NOTED DIMENSIONS ARE IN INCHES & TOLERANCES ARE AS FOLLOWS
X.X: ±0.1000" X.XX: ±0.0100"
X.XXX: ±0.0050" X.XXXX: ±0.0001"
ANGLES: ±0.5° FINISH: 125 MICRO INCHES
BREAK ALL SHARP EDGES
& CORNERS .002" MAX

MATERIAL: 2
FINISH: --

LICK OBSERVATORY

DRAWN	CABAK	--
CHECKED	--	--
DESIGNED	CABAK	--
ENGINEER	CABAK	--

SW DOCUMENT FILE: 1

KECK 1 DEPLOYABLE TERTIARY MIRROR
TOOLING & FIXTURING

TITLE: MAIN ANGLE, TYPE 1 & 2

PROJECT CODE: K1D3FD
NEXT ASSY: 872-LM8420
DWG NO: 872-LM8421-XX
B
1/1