REVISIONS				
REV	DATE	DRW'N	CHCK'D	DESCRIPTION
A	20MAY16	GFC	--	INITIAL RELEASE
B	23MAY16	GFC	--	REMOVED LOCKING PLATE
C	25MAY16	GFC	JW	ADDED END PLUGS
D	26May16	GFC	--	TOLERANCE CHANGES, NOTE 3
E	15JUN16	GFC	--	DIMENSION CHANGE
F	22JUN16	GFC	JW	ITEM 4 CHANGE

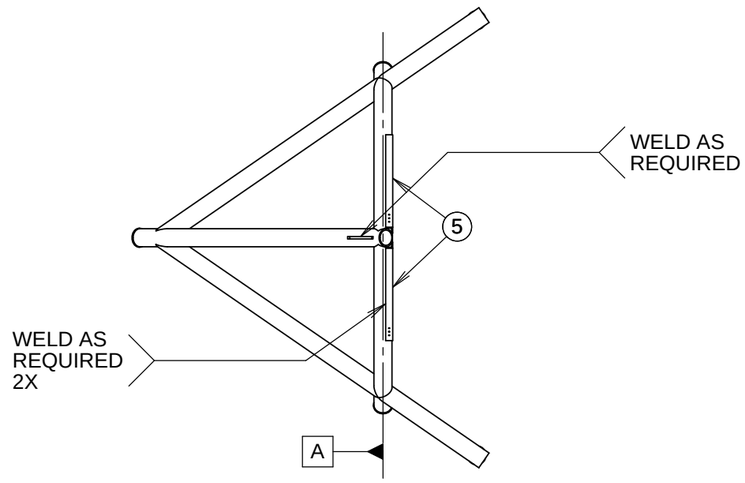

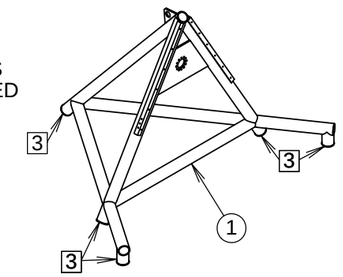

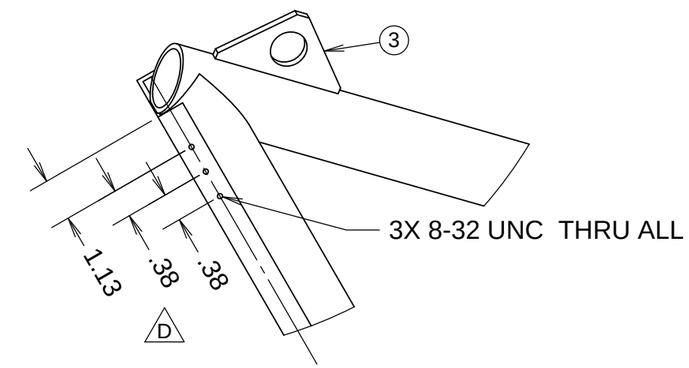

VIEW B-B

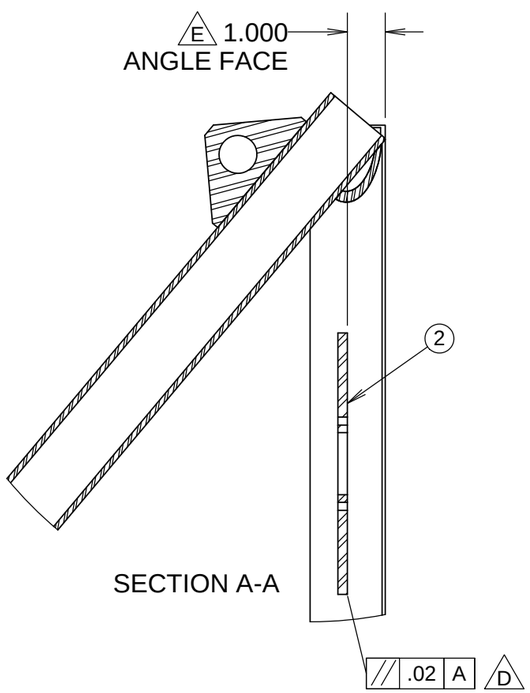

SECTION A-A

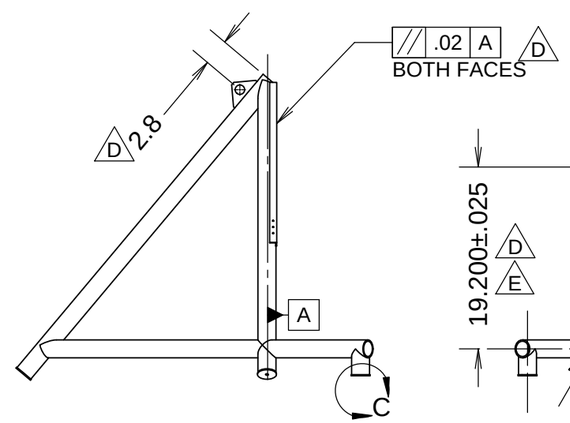

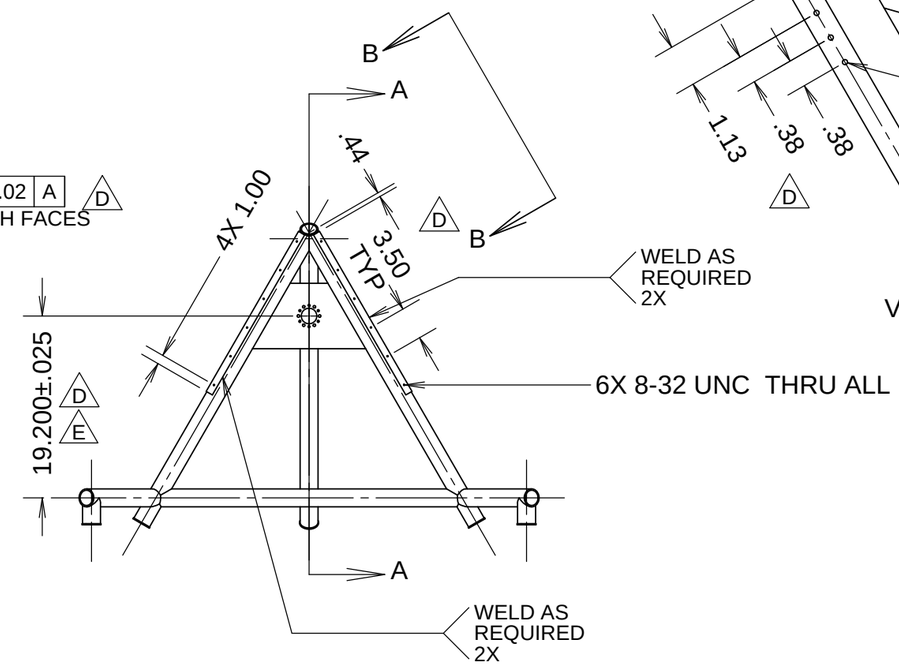

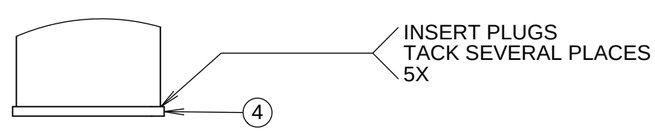

DETAIL C

ITEM	QTY	P/N	DESCRIPTION
1	1	872-LM8320-01	TRIPOD FRAME
2	1	872-LM8320-02	BEARING GUSSET
3	1	872-LM8320-03	LIFT LUG
4	5	872-LM8320-04	END PLUG
5	2	NA	ALUMINUM ANGLE, 3/4 X 3/4 X 1/8, 19-1/2" LNG

NOTES

1 WELD PREP PARTS AS NEEDED
2 WELD USING APPROPRIATE ESTABLISHED STANDARDS
3 ADD ITEM 4 (END PLUG) AS PER DETAIL C TO BOTTOM FACING ENDS ONLY

UNLESS OTHERWISE NOTED DIMENSIONS ARE IN INCHES & TOLERANCES ARE AS FOLLOWS
X.X: ±0.1000" X.XX: ±0.0100"
X.XXX: ±0.0050" X.XXXX: ±0.0001"
ANGLES: ±0.5° FINISH: 125 MICRO INCHES
BREAK ALL SHARP EDGES
& CORNERS .002" MAX

MATERIAL: PARTS LIST
FINISH: NA

LICK OBSERVATORY

DRAWN: CABAK --
CHECKED: -- --
DESIGNED: CABAK --
ENGINEER: CABAK --

KECK 1 DEPLOYABLE TERTIARY MIRROR
TOOLING & FIXTURING

TITLE: TRIPOD WELDMENT

SW DOCUMENT FILE: *872-LM8320 Tripod Weldment*
PROJECT CODE: K1D3FD
NEXT ASSY: 872-LM8332
DWG NO: 872-LM8320
F
1/1