REVISIONS				
REV	DATE	DRWN	CHK'D	DESCRIPTION
A	3MAR16	GFC		INITIAL RELEASE
B	29MAR16	GFC		HOLE & P/N CHANGE
C	4MAY16	GFC	KECK	TOLERANCE CHANGE
D	8JUL16	GFC	--	NOTE 2 CHANGE

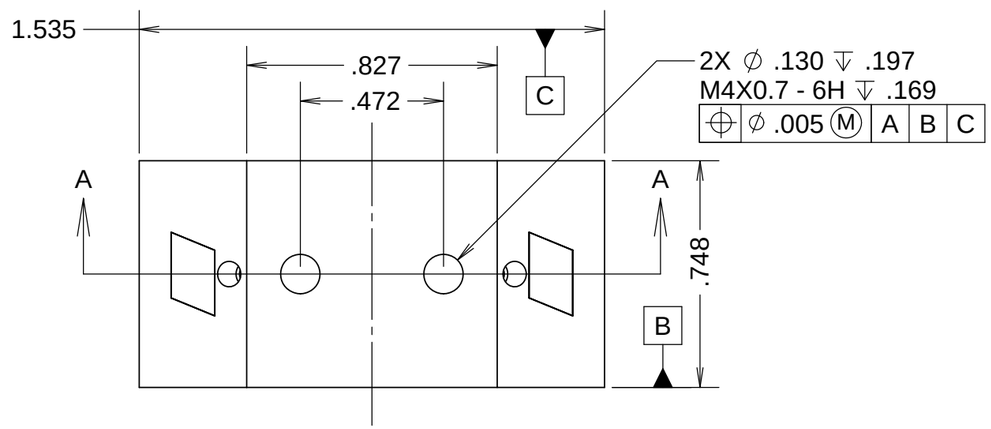

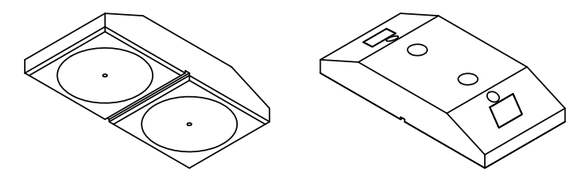

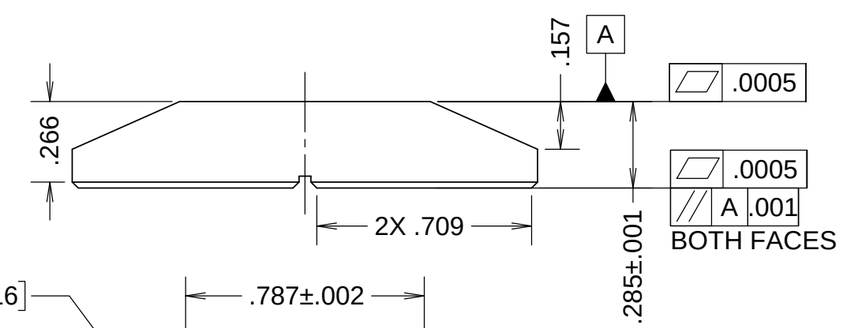

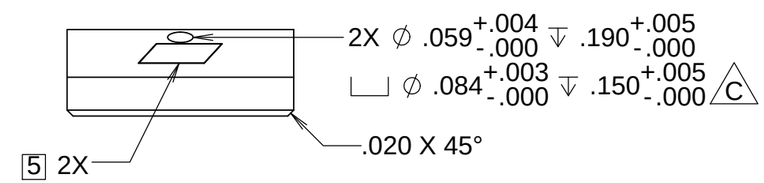

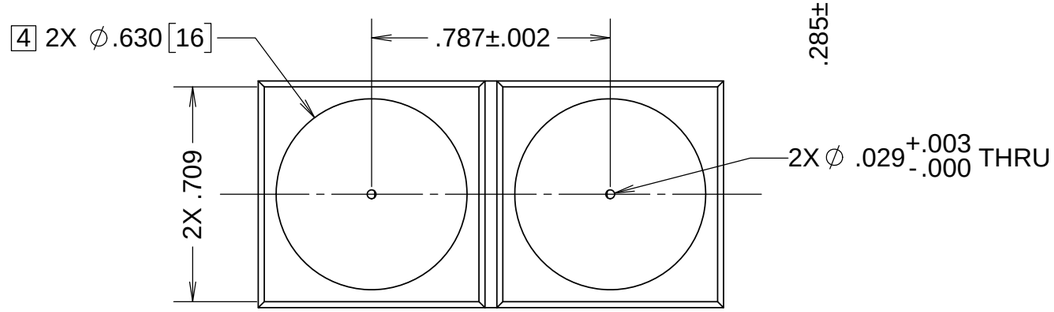

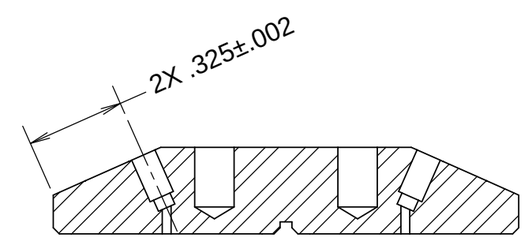

SECTION A-A

NOTES

1 ROUGH MACHINE, HEAT TREAT PER NOTE 2, THEN FINISH MACHINE
2 HEAT TREAT PER FOLLOWING SCHEDULE:
  2.1 1/2 HOUR AT 843C IN VACUUM OR INERT GAS, GAS QUENCH
  2.2 1 HOUR AT 316C, AIR COOL
  2.3 48 HOURS AT 93C, AIR COOL
3 REMOVE BURRS AND SHARP EDGES, **DO NOT CHAMFER EDGE OF Ø.029 HOLE**
4 SCRIBE OR MARK Ø 16 MM
5 SCRIBE OR MARK FLAT SYMBOL FOR IDENTIFICATION

UNLESS OTHERWISE NOTED DIMENSIONS ARE IN INCHES & TOLERANCES ARE AS FOLLOWS
X.X: ±0.1000" X.XX: ±0.0100"
X.XXX: ±0.0050" X.XXXX: ±0.0001"
ANGLES: ±0.5° FINISH: 125 MICRO INCHES
BREAK ALL SHARP EDGES & CORNERS .002" MAX

MATERIAL: INVAR-36
FINISH: --

LICK OBSERVATORY

DRAWN	CABAK	--
CHECKED	--	--
DESIGNED	CABAK	--
ENGINEER	CABAK	--
SW DOCUMENT FILE		QUANTITY --

KECK 1 DEPLOYABLE TERTIARY MIRROR
TOOLING & FIXTURNG

TITLE: LATERAL PUCK FLAT

PROJECT CODE: K1D3FD
NEXT ASSY: 872-LM8311
DWG NO: 872-LM-8303
D
1/1