REVISIONS				
DRWN	DATE	CHK'D	REV	DESCRIPTION
CR	11MAY17		A	PRELIMINARY RELEASE
CR	14JUL2017		B	ADDED HOLES ETC
CR	24JUL		C	ENLARGED CENTRAL HOLES

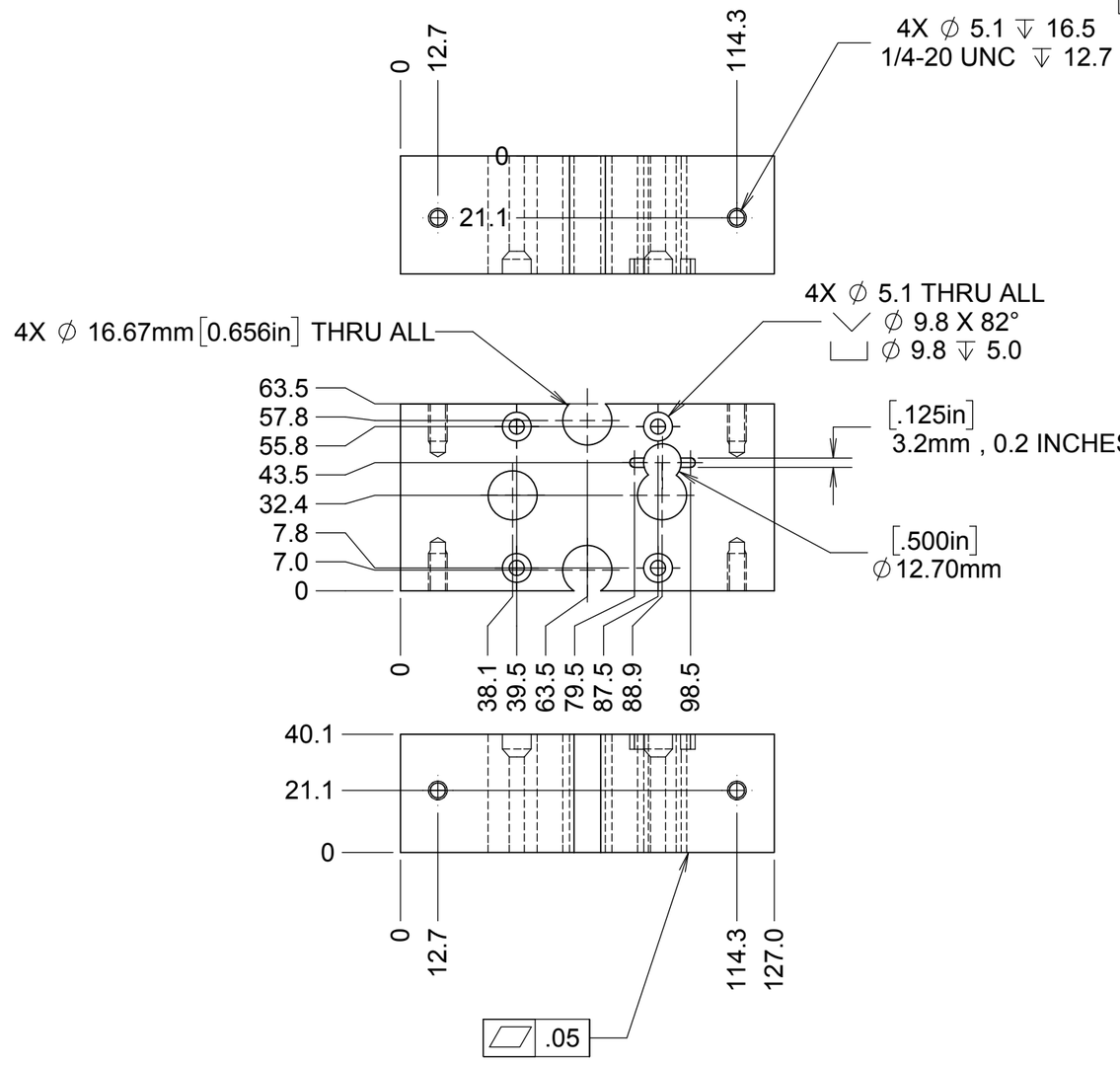

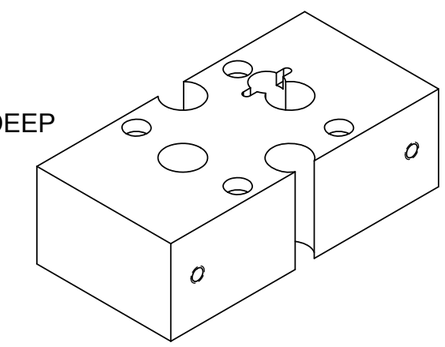

NOTES

1 CAD MODEL FILENAME, *872-LM8251 M3 Attachment Mid Block*
2 MATERIAL: 6061T6 ALUMINUM

UNLESS OTHERWISE NOTED DIMENSIONS ARE IN MILLIMETERS & TOLERANCES ARE AS FOLLOWS:
X.X: ±0.10 mm X.XX: ±0.01 mm
ANGLES: ±0.5° FINISH: 3 MICRONS (μm)
BREAK ALL SHARP EDGES & CORNERS .25mm MAX

MATERIAL: SEE NOTES
FINISH:

LICK OBSERVATORY

DRAWN: C. RATLIFF
CHECKED: JW DM — TBD
DESIGNED: C. RATLIFF — NA
ENGINEER:

SW DOCUMENT FILE: 872-LM8251 M3 ATTACHMENT MID BLOCK
QUANTITY: 1

KECK 1 DEPLOYABLE TERTIARY MIRROR
K1DM3 TOOLING
TITLE: M3 ATTACHMENT MID BLOCK

PROJECT CODE: K1D3FD
NEXT ASSY: 872-LM0000
DWG NO: 872-LM8251
REV: C
1 / 1