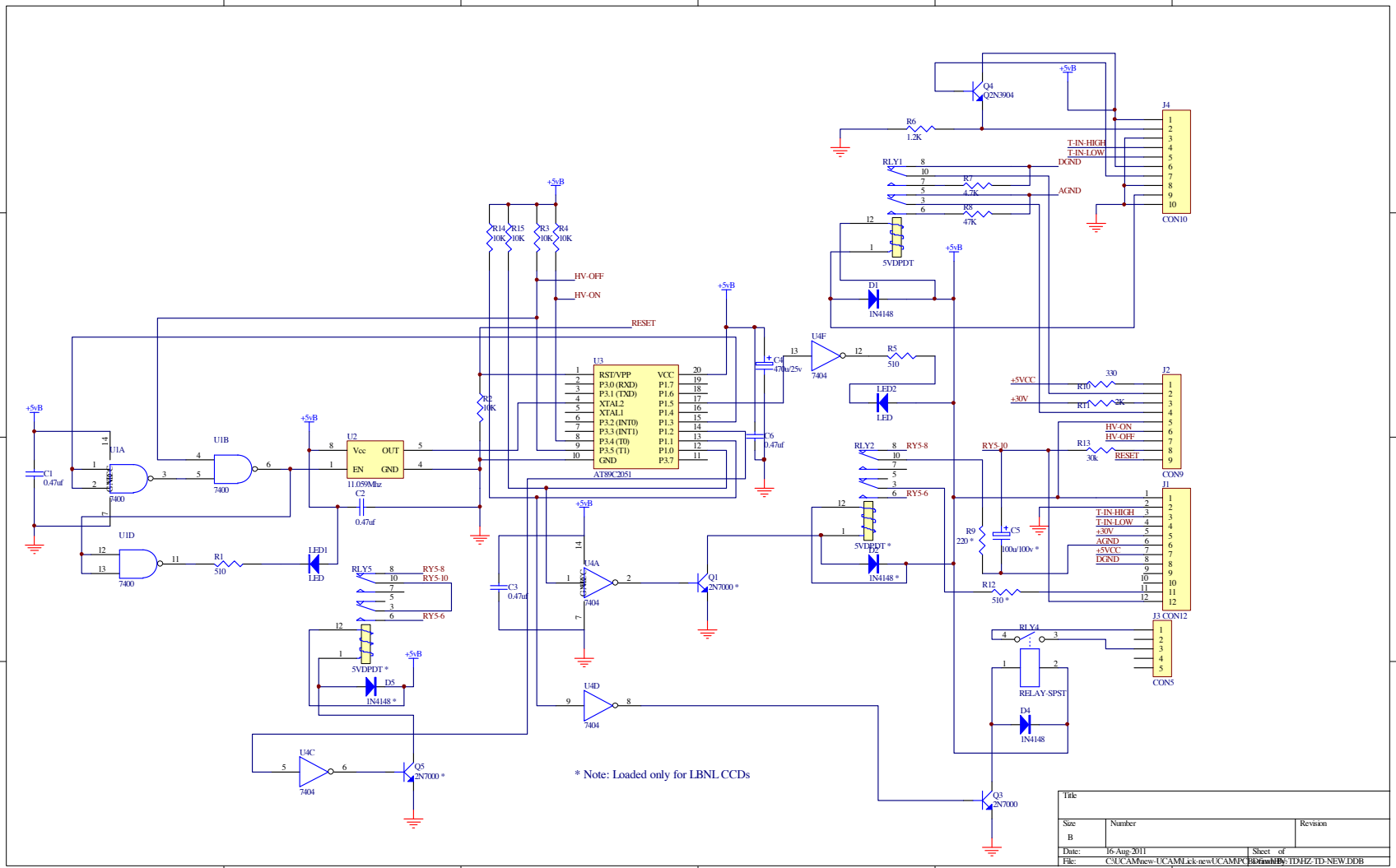
U1A
U1B
U1D
7400
C1
0.47uf
U2
Vcc
OUT
EN
GND
11.059Mhz
C2
0.47uf
U3
RST/VPP
P3.0 (RXD)
P3.1 (TXD)
XTAL2
XTAL1
P3.2 (INT0)
P3.3 (INT1)
P3.4 (T0)
P3.5 (T1)
GND
VCC
P1.7
P1.6
P1.5
P1.4
P1.3
P1.2
P1.1
P1.0
P3.7
AT89C2051
R1
510
LED1
LED
R2
10K
R14
10K
R15
10K
R3
10K
R4
10K
HV-OFF
HV-ON
RESET
C4
47ou/25v
C6
0.47uf
C3
0.47uf
U4A
U4B
U4C
U4D
U4F
7404
Q1
2N7000 *
Q5
2N7000 *
Q3
2N7000
Q4
Q2N3904
R6
1.2K
R7
4.7K
R8
47K
RLY1
5VDPDT
D1
1N4148
R5
510
LED2
LED
RLY2
5VDPDT *
1N4148 *
RLY5
RY5-8
RY5-10
RY5-6
5VDPDT *
D5
1N4148 *
R9
220 *
C5
100u/100v *
R12
510 *
RLY4
RELAY-SPST
D4
1N4148
J4
CON10
T-IN-HIGH
T-IN-LOW
DGND
AGND
J2
CON9
+5VCC
+30V
R10
330
R11
2K
R13
30k
RY5-J0
J1
+30V
AGND
+5VCC
DGND
J3 CON12
CON5
+5vB
* Note: Loaded only for LBNL CCDs
Title
Size
B
Number
Revision
Date:
16-Aug-2011
Sheet of
File:
C:\UCAM\new-UCAM\Lick-new\UCAMPCB\Drawing\TDHZ-TD-NEW.DDB
Drawn By: